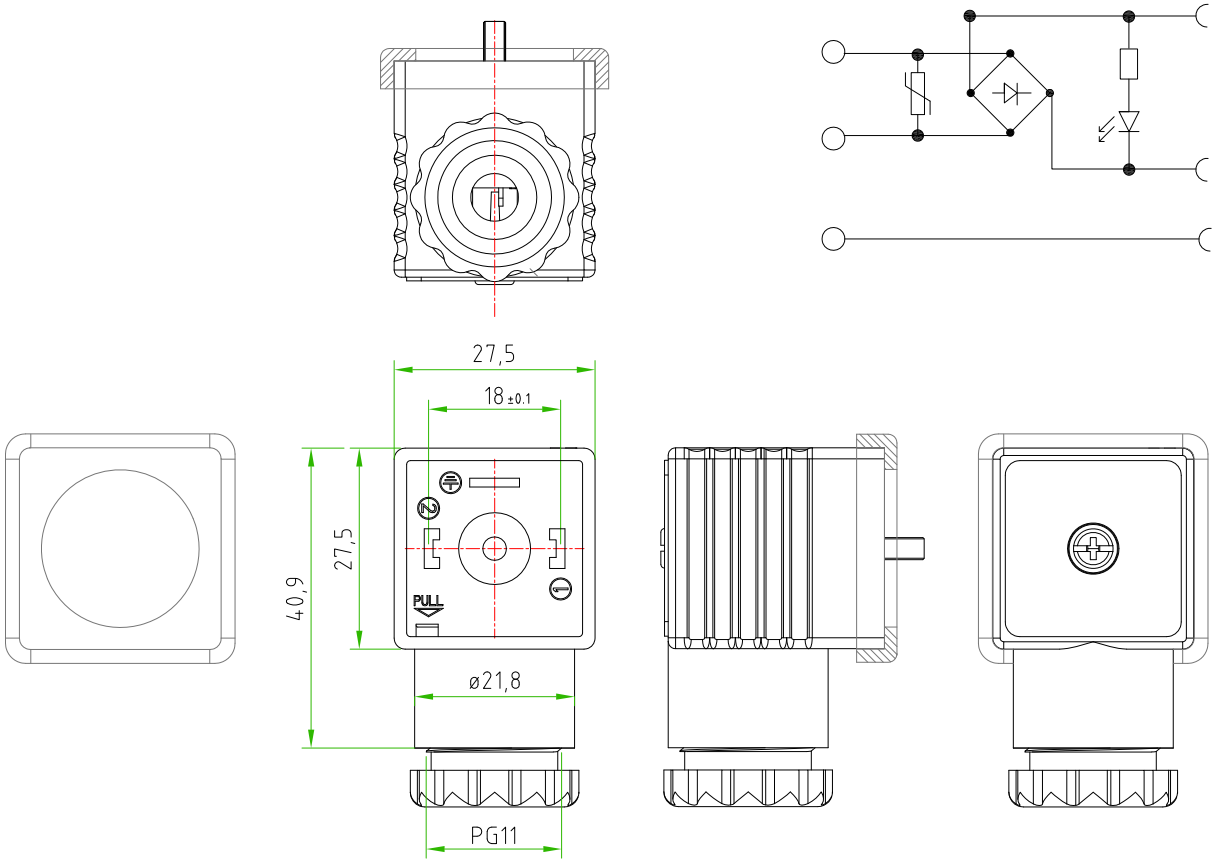

REV.01

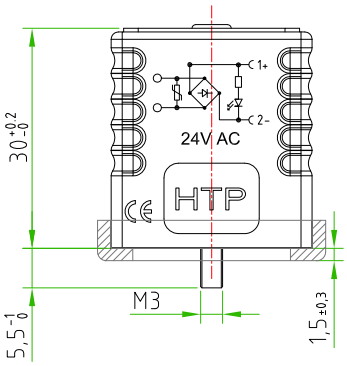

PAY ATTENTION:
MUST BE USED THE SPECIAL INTERNAL CORE FOR ELECTRONIC WITH BRIDGE RECTIFIER

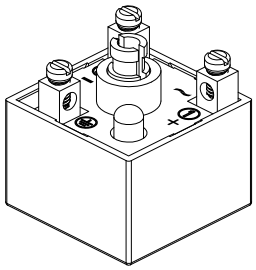

CONNECTOR FEATURES	
PRODUCT TYPE	EN175301-803 FORM A FIELD ATTACHABLE.
HOUSING MATERIAL/COLOUR	PA66 /TRASPARENT
PRESS-CABLE MATERIAL/COLOUR	PA66 /BLACK
INTRENAL CORE MATERIAL/COLOUR	PA66 /BLACK
HEIGHT HOUSING	30mm
CONTACTS SPACING	18mm
CONTACTS TYPE	TOWER CONTACTS
NUMBER OF POLES	2POLES+EARTH
EARTH POSITIONING	H.12 (TURNABLE)
CABLE EXIT	PG9/11 UNIFIED
SUITABLE CABLE	FROM ø6mm TO ø10mm
MAX.CONDUCTOR SIZE	1,5mm²
PROTECTION CLASS	IP67
CIRCUIT TYPE	BRIDGE RECTIFIER(1A)+VARISTOR+RED LED N°1 VARISTOR: 05D470K N°1 BRIDGE RECTIFIER: DB107S N°1 UNIPOLAR RED LED
RATED VOLTAGE	24V AC
CONNECTOR TEMPERATURE RANGE	from -40°C to +90°C
GASKET TYPE	PROFILED NBR
FIXING SCREW	M3X0,5 L=32,5mm
CONNECTOR WITH H.T.P. LOGO	

CUSTOMER APPROVAL	
SIGNATURE	DATE
PLEASE SIGN AND RETURN	

Rev.	Modify	Date	Signed	Approved
01	-	2018.04.18	SUGLIANI	CIMMINO

Rev.	Modify	Date	Firma	Approved

Rev.	Modify	Date	Firma	Approved

A4

Designer	SUGLIANI R.	Date	2018-02-15	Tollerance	±0,3	Units:	mm	Series	EN175301-803 (form A)	Drawing n. 1-1
Approved	CIMMINO L.	Date	2018-02-15	Scale	1:1	Size:	A4	Customer code:		

DESCRIPTION
SQUARE CONNECTOR EN175301-803 FORM A,FIELD ATTACHABLE,2P.+PE, WITH BRIDGE RECTIFIER+VARISTOR+UNIPOLAR RED LED,24V AC, TRASPARENT HOUSING,PG9/11 unified. CONNECTOR WITH H.T.P. LOGO.

H.T.P.PART NUMBER
G1TU2RL1

H.T.P. High Tech Products S.R.L. Via Lesina,45 -24030- Brembate di Sopra (Bg) - ITALY Phone:+39.035692509 Fax:+39.035203291 E-mail: info@webhtp.eu Web: http://www.webhtp.eu/

ALL RIGHTS ARE RESERVED.