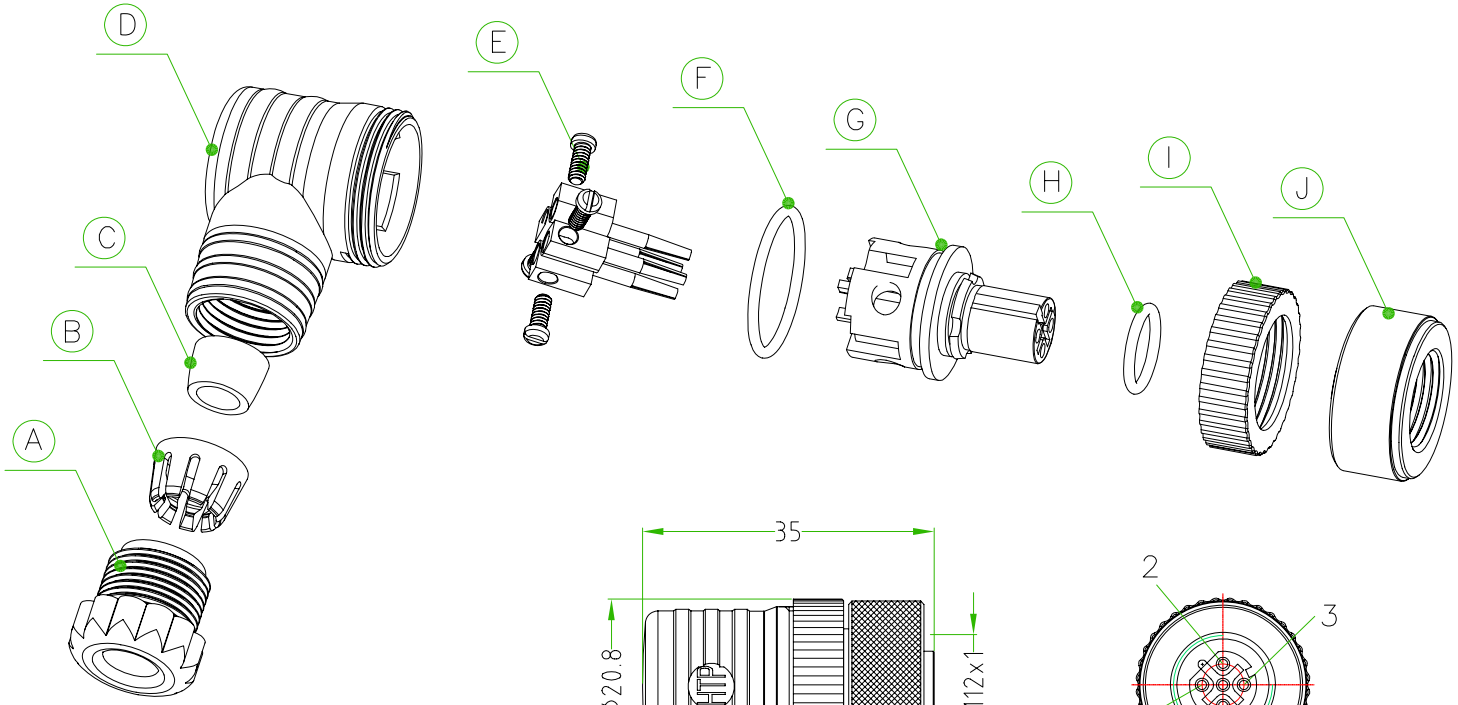

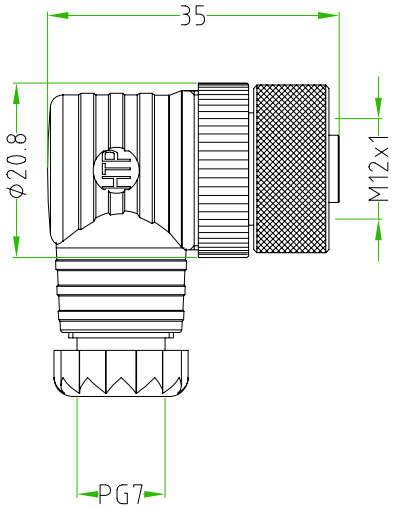

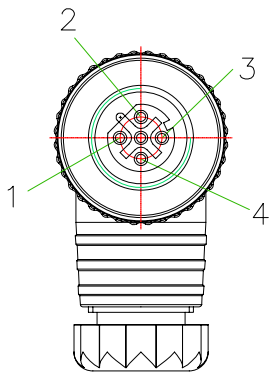

CONNECTOR FEATURES	
TYPE CONTACT	FEMALE D-CODED
NUMBER OF CONTACTS	4 POLES
HOUSING MATERIAL	NYLON6 + 15% FIBRE GLASS
HOUSING TYPE	90°
HOUSING COLOUR	BLACK
PRESS CABLE SCREW	PG7
RATED VOLTAGE	250V AC/DC
RATED CURRENT	4A
COUPLING NUT MATERIAL	Brass+nickel plated (CuZnNi)
O''RING MATERIAL	NBR
PROTECTION CLASS	IP67
CONNECTOR WITH H.T.P.LOGO	

A	PRESS CABLE SREW
B	LAMELLAE PRESS-CABLE SEAL
C	GAKET PRESS-CABLE SEAL
D	HOUSING BLACK
E	SCREW CONTACT GOLD PLATED
F	O-RING
G	INTERNAL CORE M12 D-CODED
H	O-RING
I	PLASTIC NUT FOR HOUSING
J	M12 NUT Brass+nickel plated (CuZnNi)

TOLLERANZE ±0.2	DISEGNATORE LORENZO CIMMINO	DATA 01.07.13	SCALA 1:1		PESO
U.d.M / ANGOLO	CONTROLLATO				
DESCRIZIONE M12 FEMALE D-CODED FIELD ATTACHABLE 4 POLES 90° BLACK PG7 CONNECTORS WITH H.T.P.LOGO		TIPO M12 D-CODED			MATERIALE
High Tech Products HTP	H.T.P. HIGH TECH PRODUCTS	CODICE D-12FB4000			