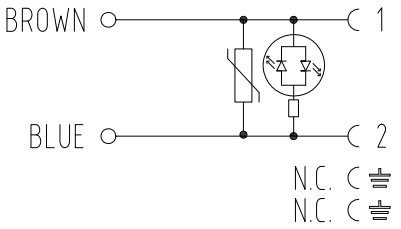

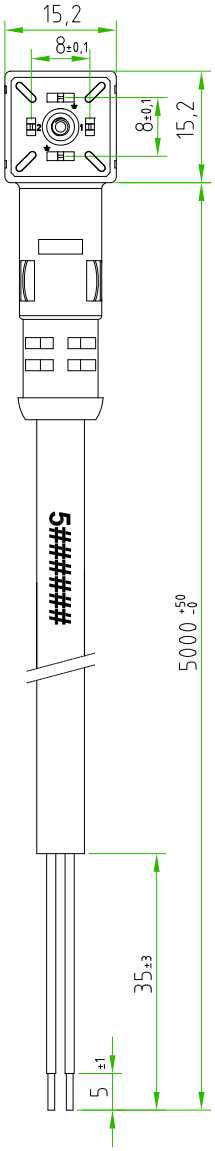

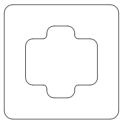

CONNECTOR FEATURES	PRODUCT TYPE	MICRO CONNECTOR EN175301-803 (type C)
	CONNECTOR COLOUR	BLACK
	CONTACTS SPACING	8mm
	NUMBER OF CONTACTS	2POLES+2EARTHS
	EARTH POSITIONING	H.6-12 NOT CONNECTED
	CENTRAL FIXING SCREW	M2,5X0,5 L=22,5mm
	GASKET TYPE	INTEGRATED (NBR)
	PROTECTION CLASS	IP67
	CIRCUIT TYPE	BIPOLAR RED LED+VARISTOR
	RATED VOLTAGE	24V AC/DC
	CONNECTOR WITH H.T.P.LOGO	
CABLE FEATURES	H.T.P.CABLE CODE	CAVO A4
	NUMBER OF CONDUCTORS	N°2
	CONDUCTORS SECTION	0,5mm²
	CABLE MATERIAL	PVC CEI2022IIOR
	COATING COLOUR	GREY RAL7032
	CONDUCTORS INSULATION MATERIAL	PVC
	CABLE LENGHT	5000mm
	STRIPPING	35mm STANDARD
	PEELING AND TINNING	5mm STANDARD
	ON THE CABLE,NEAR THE CONNECTOR HEAD,MUST BE SILK PRINTED THE H.T.P. PRODUCTION DATE CODE 5######	

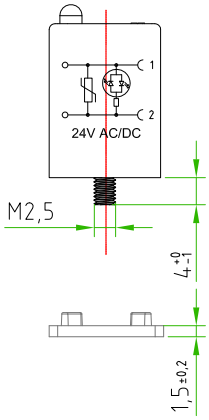

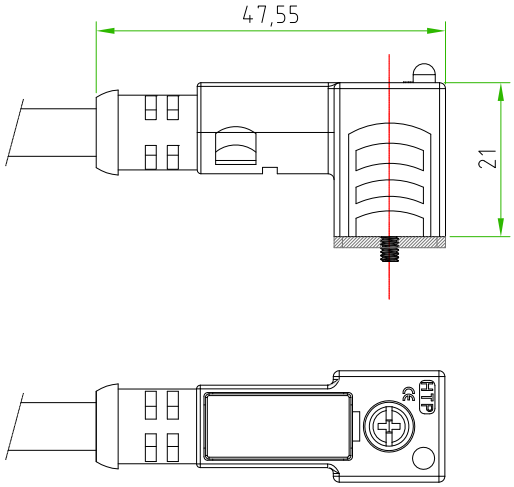

CUSTOMER APPROVAL	
SIGNATURE	DATE
PLEASE SIGN AND RETURN	

Rev.	Modify	Date	Signed	Approved

Designer	CIMMINO L.	Date	2017-10-02	Tollerance	±0.3	Units:	mm	Series	EN175301-803	Drawing n.
Approved	MAZZOLA M.	Date	2017-10-02	Scale	1:1	Size:	A4	Customer code:		1-1

A4

DESCRIPTION

SQUARE MICRO CONNECTOR,EN175301-803 (type-C),2P.+P.E.,8mm,BLACK, WITH BIPOLAR RED LED+VARISTOR,24V,WITH CABLE PVC/PVC,CEI2022IIOR, 2x0,5mm²,GREY COLOUR,L=5m,CONNECTOR WITH H.T.P.LOGO

H.T.P.PART NUMBER

CP1N02VL1CA45

H.T.P. High Tech Products S.R.L. Via Lesina,45 -24030- Brembate di Sopra (Bg) - ITALY Phone:+39.035692509 Fax:+39.035203291 E-mail: info@webhtp.eu Web: http://www.webhtp.eu/

ALL RIGHTS ARE RESERVED.