Rev.	Modify	Date	Signed	Approved

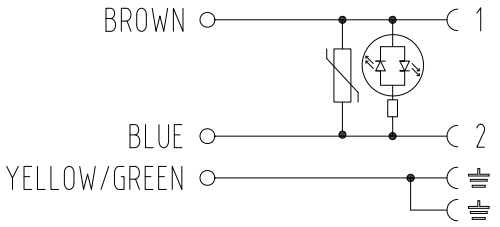

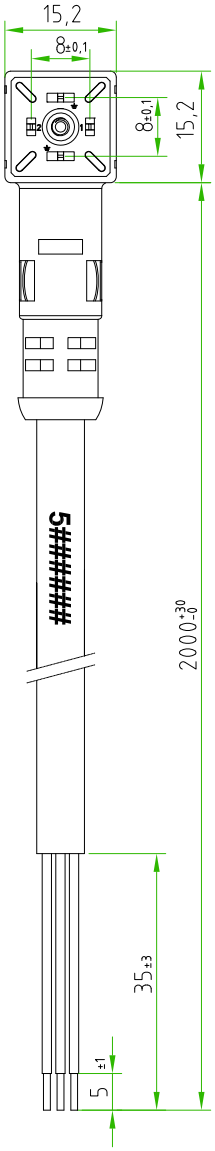

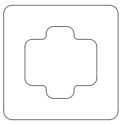

CONNECTOR FEATURES	PRODUCT TYPE	MICRO CONNECTOR EN175301-803 (type C)
	CONNECTOR COLOUR	BLACK
	CONTACTS SPACING	8mm
	NUMBER OF CONTACTS	2POLES+2EARTHS
	EARTH POSITIONING	H.6-12
	CENTRAL FIXING SCREW	M2,5X0,5 L=22,5mm
	GASKET TYPE	INTEGRATED (NBR)
	PROTECTION CLASS	IP67
	CIRCUIT TYPE	BIPOLAR RED LED+VARISTOR
	RATED VOLTAGE	24V AC/DC
	CONNECTOR WITH H.T.P.LOGO	
CABLE FEATURES	H.T.P.CABLE CODE	CAVO 01
	NUMBER OF CONDUCTORS	N°3
	CONDUCTORS SECTION	0,5mm²
	CABLE MATERIAL	PVC IEC332-1 H03VVF
	COATING COLOUR	BLACK
	CONDUCTORS INSULATION MATERIAL	PVC
	CABLE LENGHT	2000mm
	STRIPPING	35mm STANDARD
	PEELING AND TINNING	5mm STANDARD
	ON THE CABLE,NEAR THE CONNECTOR HEAD,MUST BE SILK PRINTED THE H.T.P. PRODUCTION DATE CODE 5######	

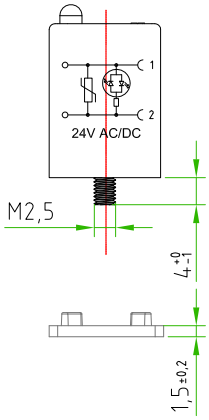

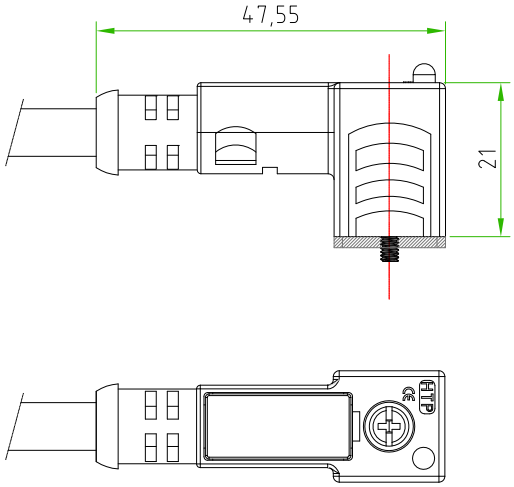

CUSTOMER APPROVAL	
SIGNATURE	DATE
PLEASE SIGN AND RETURN	

Designer	SUGLIANI R.	Date	2016-03-30	Tollerance	±0.3	Units:	mm	Series	EN175301-803
Approved	CIMMINO L.	Date	2016-03-30	Scale	1:1	Size:	A4	Customer code:	

Drawing n. 1-1

A4

HTP High Tech Products S.R.L.

DESCRIPTION

SQUARE MICRO CONNECTOR,EN175301-803 (type-C),2P.+P.E.,8mm,BLACK, WITH BIPOLAR RED LED+VARISTOR,24V,WITH CABLE PVC/PVC,IEC332-1 H03VVF, 3G0,5mm²,BLACK COLOUR,L=2m,CONNECTOR WITH H.T.P.LOGO

H.T.P.PART NUMBER

CP1N02VL1C012

H.T.P. High Tech Products S.R.L. Via Lesina,45 -24030- Brembate di Sopra (Bg) - ITALY Phone:+39.035692509 Fax:+39.035203291 E-mail: info@webhtp.eu Web: http://www.webhtp.eu/

ALL RIGHTS ARE RESERVED.