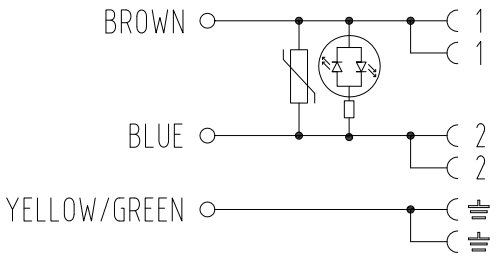

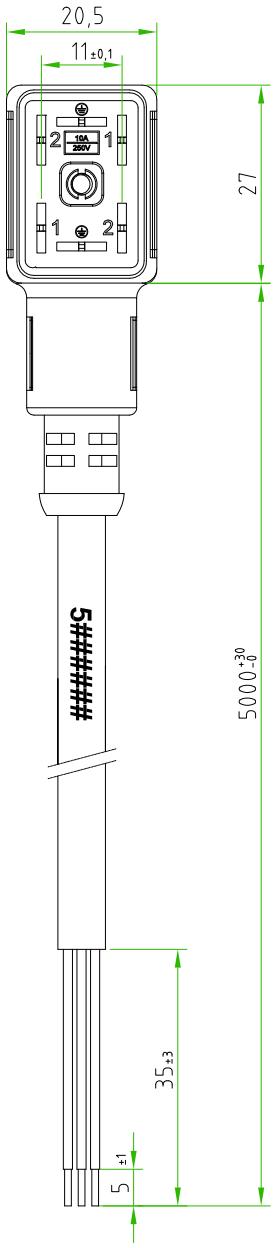

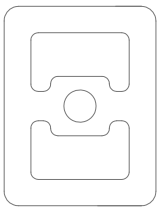

CONNECTOR FEATURES	PRODUCT TYPE	RECTANGULAR CONNECTOR INDUSTRIAL STANDARD (TYPE B)
	CONNECTOR COLOUR	BLACK
	CONTACTS SPACING	11mm
	NUMBER OF CONTACTS	2POLES+2EARTHS
	EARTH POSITIONING	H.6-12
	CENTRAL FIXING SCREW	M3X0,5 L=25mm
	GASKET TYPE	INTEGRATED (NBR)
	PROTECTION CLASS	IP67
	CIRCUIT TYPE	BIPOLAR RED LED+VARISTOR
	RATED VOLTAGE	24V AC/DC
	CONNECTOR WITH H.T.P.LOGO	
CABLE FEATURES	H.T.P.CABLE CODE	CAVO 09
	NUMBER OF CONDUCTORS	N°3
	CONDUCTORS SECTION	0,75mm²
	CABLE MATERIAL	PUR Li-YY11Y
	COATING COLOUR	BLACK
	CONDUCTORS INSULATION MATERIAL	PVC
	CABLE LENGHT	5000mm
	STRIPPING	35mm STANDARD
	PEELING AND TINNING	5mm STANDARD
	ON THE CABLE,NEAR THE CONNECTOR HEAD,MUST BE SILK PRINTED THE H.T.P. PRODUCTION DATE CODE 5######	

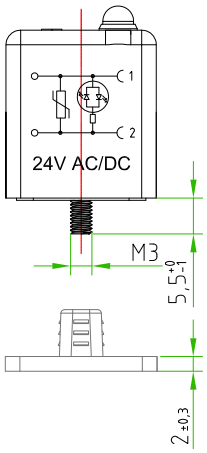

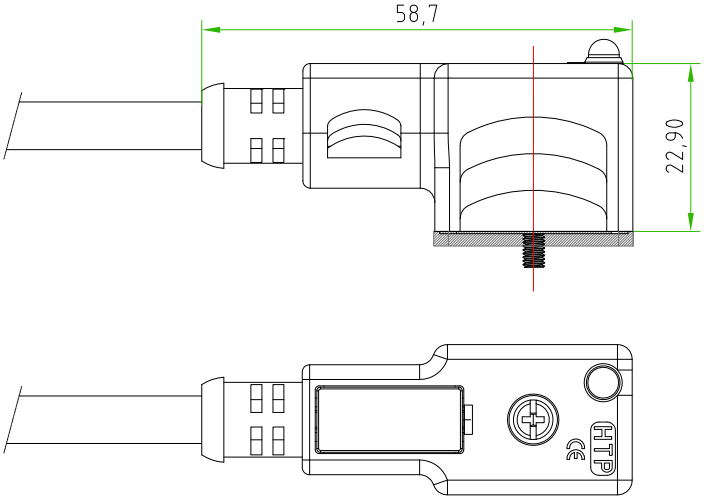

CUSTOMER APPROVAL	
SIGNATURE	DATE
PLEASE SIGN AND RETURN	

Rev.	Modify	Date	Signed	Approved

Rev.	Modify	Date	Signed	Approved

Rev.	Modify	Date	Signed	Approved

A4

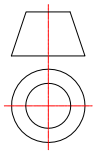

Designer	CIMMINO L.	Date	2020-05-15	Tollerance	±0.3	Units:	mm	Series	INDUSTRIAL STANDARD	Drawing n. 1-1
Approved	SUGLIANI R.	Date	2020-05-15	Scale	1:1	Size:	A4	Customer code:	

DESCRIPTION

RECTANGULAR CONNECTOR INDUSTRIAL STANDARD(type-B),2P.+P.E.,BLACK,WITH BIPOLAR RED LED+VARISTOR, 24V AC/DC,WITH CABLE PUR/PVC Li-YY11Y,3G0.75mm², BLACK COLOUR, L=5m.CONNECTOR WITH H.T.P.LOGO

H.T.P.PART NUMBER

CM1N02VL1C095

H.T.P. High Tech Products S.R.L. Via Lesina,45 -24030- Brembate di Sopra (Bg) - ITALY Phone:+39.035692509 Fax:+39.035203291 E-mail: info@webhtp.eu Web: http://www.webhtp.eu/

ALL RIGHTS ARE RESERVED.