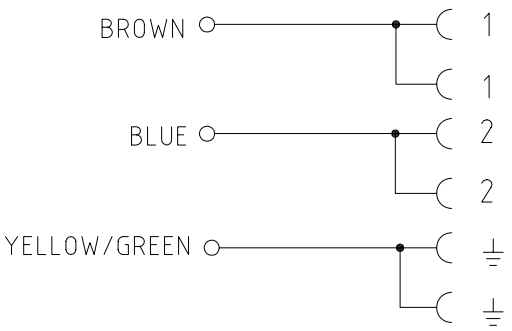

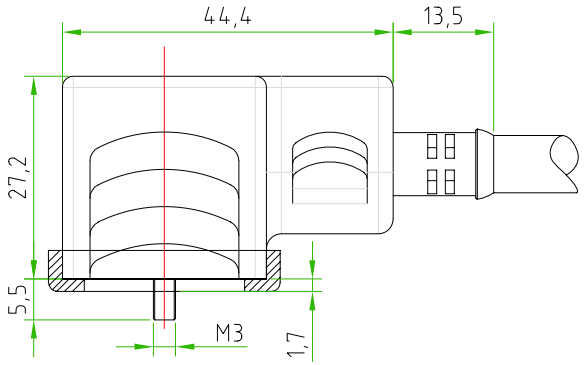

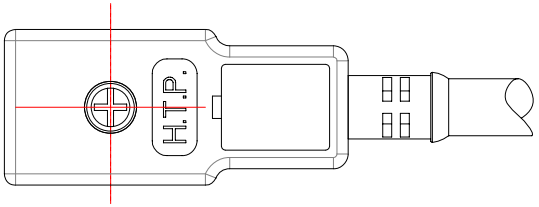

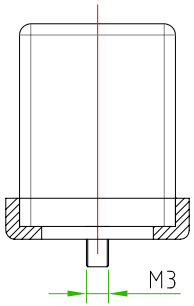

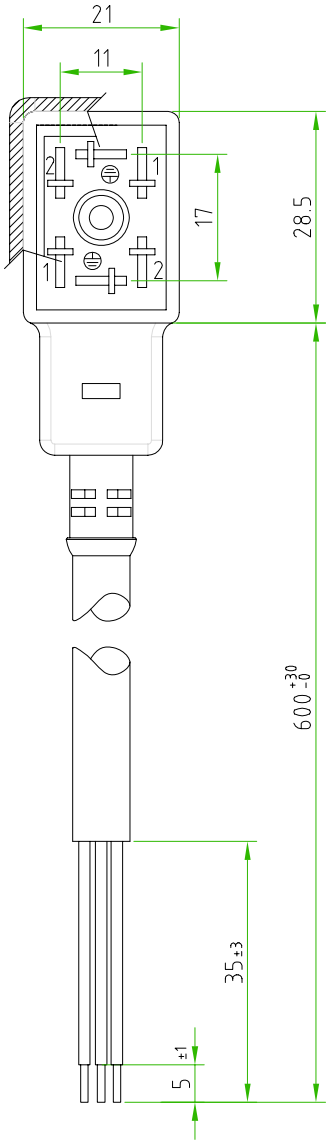

CONNECTOR FEATURES	PRODUCT TYPE	CM1 SERIES
	HOUSING COLOUR	BLACK
	CONTACT TYPE	2POLES+EARTH
	CONTACT SPACING	11mm
	CABLE LENGHT	600mm
	PROTECTION CLASS	IP67
	STRIPPING	35mm STANDARD
	PEELING AND TINNING	5mm STANDARD
	FIXING SCREW	M3X28.7
	PROFILED GASKET	NBR
	EARTH POSITIONING H	6/12
	VOLTAGE	1-250V AC/DC
	CONNECTOR WITHOUT ELECTRONIC	
	CONNECTOR WITH H.T.P.LOGO	
CABLE FEATURES	H.T.P. CABLE CODE	04
	NUMBER OF CONDUCTORS	N°3
	CONDUCTOR SECTION	0.5mm²
	CABLE MATERIAL	PVC CEI2022IIOR
	CABLE COLOUR	GREY RAL7032
	CONDUCTOR INSULATION MATERIAL	PVC

TOLLERANZE ±0.3	DISEGNATORE LORENZO CIMMINO	DATA 12-02-13	SCALA 1 : 1		DISEGNO N.
U.d.M / ANGOLO	CONTROLLATO				
DESCRIZIONE DIN43650/B,2POLES+EARTH(H.6/12),WITHOUT ELECTRONIC, WITH CABLE PVC/PVC CEI2022IIOR 3X0,5mm² GREY L=0.6m CONNECTOR WITH H.T.P.LOGO		TIPO CM1			MATERIALE
High Tech Products HTP	H.T.P. HIGH TECH PRODUCTS	CODICE CM1N02000C040F			