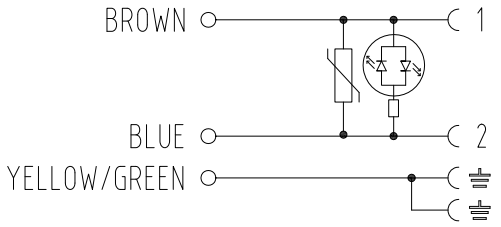

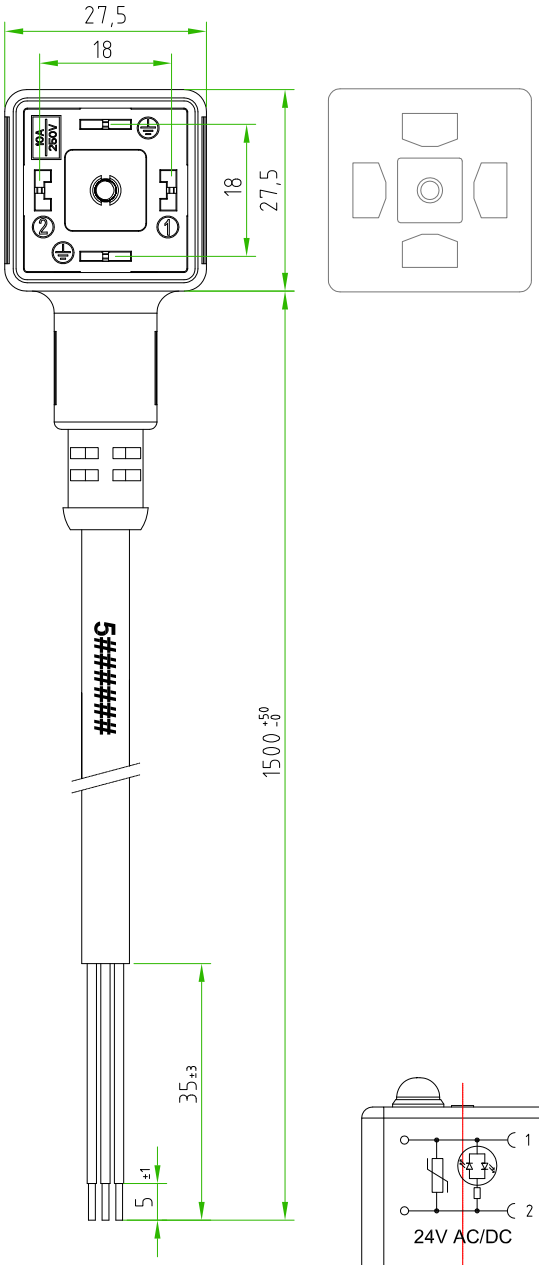

CONNECTOR FEATURES	PRODUCT TYPE	SQUARE CONNECTOR EN175301-803(type-A)
	CONNECTOR COLOUR	BLACK
	CONTACTS SPACING	18mm
	NUMBER OF CONTACTS	2POLES+2EARTHS
	EARTH POSITIONING	H.6-12
	CENTRAL FIXING SCREW	M3X0,5 L=25mm
	GASKET TYPE	INTEGRATED (NBR)
	PROTECTION CLASS	IP67
	CIRCUIT TYPE	BIPOLAR RED LED+VARISTOR
	RATED VOLTAGE	24V AC/DC
	CONNECTOR WITH H.T.P.LOGO	
CABLE FEATURES	H.T.P.CABLE CODE	CAVO 02
	NUMBER OF CONDUCTORS	N°3
	CONDUCTORS SECTION	0,75mm²
	CABLE MATERIAL	PVC IEC332-1 H05VVF
	COATING COLOUR	BLACK
	CONDUCTORS INSULATION MATERIAL	PVC
	CABLE LENGHT	1500mm
	STRIPPING	35mm STANDARD
	PEELING AND TINNING	5mm STANDARD
	Operating Temperature: from -15 C° to +70C° / from +5F° to +158F° if the cable is used for static / fixed application. Operating Temperature: from -5 C° to +70C° / from +23F° to +158F° if the cable is used for mobile application	
	ON THE CABLE,NEAR THE CONNECTOR HEAD,MUST BE SILK PRINTED THE H.T.P. PRODUCTION DATE CODE 5######	

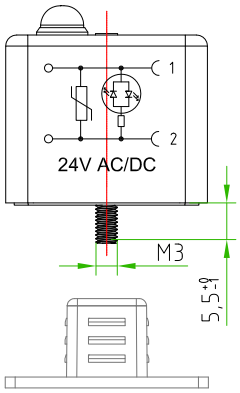

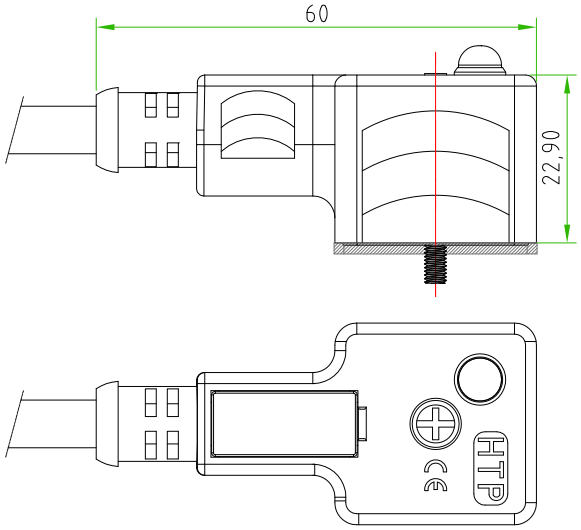

CUSTOMER APPROVAL	
SIGNATURE	DATE
PLEASE SIGN AND RETURN	

Rev.	Modify	Date	Signed	Approved

Rev.	Modify	Date	Signed	Approved

Rev.	Modify	Date	Signed	Approved

A4

Designer	CIMMINO L.	Date	2015-10-15	Tollerance	±0.1	Units:	mm	Series	EN175301-803	Drawing n.
Approved	MAZZOLA M.	Date	2015-10-15	Scale	1:1	Size:	A4	Customer code:		1-1

HTP High Tech Products S.R.L.

DESCRIPTION

SQUARE CONNECTOR EN175301-803(type-A),2P.+P.E.,BLACK,WITH BIPOLAR RED LED+VARISTOR,24V,WITH CABLE PVC/PVC,IEC332-1 H05VVF,3G0.75mm²,BLACK, L=1,5m.CONNECTOR WITH H.T.P.LOGO

H.T.P.PART NUMBER

CG1N02VL1C021E

H.T.P. High Tech Products S.R.L. Via Lesina,45 -24030- Brembate di Sopra (Bg) - ITALY Phone:+39.035692509 Fax:+39.035203291 E-mail: info@webhtp.eu Web: http://www.webhtp.eu/

ALL RIGHTS ARE RESERVED.