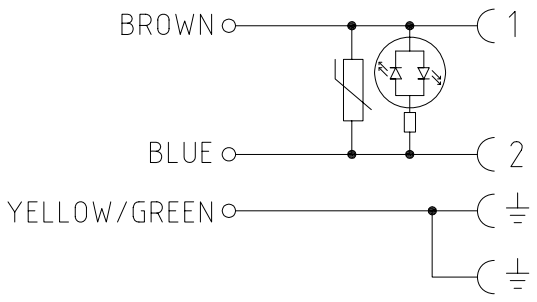

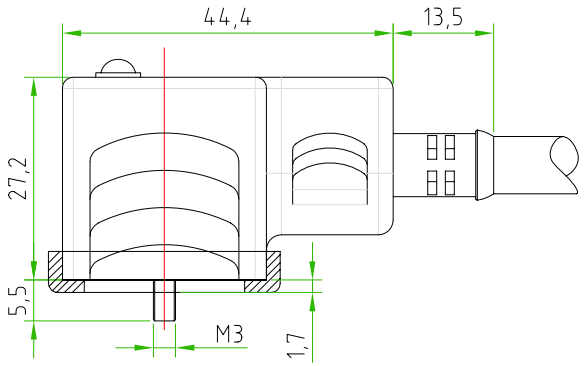

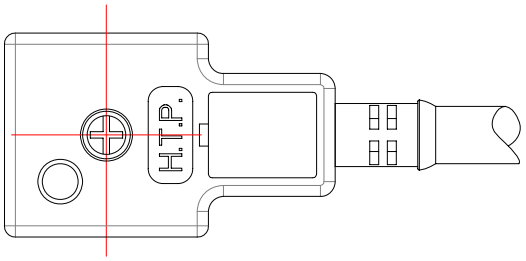

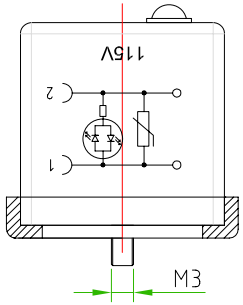

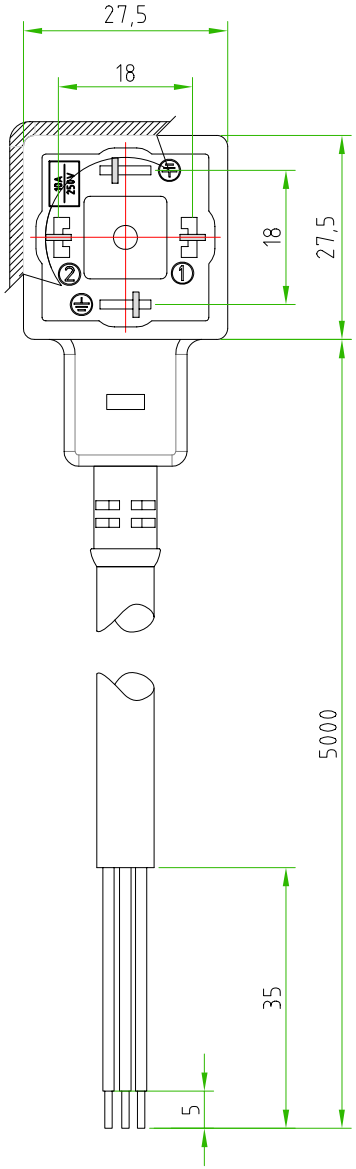

CONNECTOR FEATURES	PRODUCT TYPE	CG1 SERIES
	HOUSING COLOUR	BLACK
	CONTACT TYPE	2POLES+EARTH
	CONTACT SPACING	18mm
	CABLE LENGHT	5000mm
	PROTECTION CLASS	IP67
	STRIPPING	35mm STANDARD
	PEELING AND TINNING	5mm STANDARD
	FIXING SCREW	M3X28.7
	PROFILED GASKET	NBR
	EARTH H	6/12
	VOLTAGE	115V AC/DC
	CONNECTOR WITH YELLOW LED + VARISTOR	
CABLE FEATURES	H.T.P. CABLE CODE	03
	NUMBER OF CONDUCTORS	N°3
	CONDUCTOR SECTION	0,75mm^2
	CABLE MATERIAL	PVC CEI2022IIOR
	CABLE COLOUR	GREY
	CONDUCTOR INSULATION MATERIAL	PVC

TOLLERANZE		DISEGNATORE LORENZO CIMMINO	DATA 25-11-10	SCALA 1 : 1	DISEGNO N.
U.d.M	ANGOLO	CONTROLLATO			
DESCRIZIONE DIN43650/A,2POLES+EARTH(H.6/12),WITH YELLOW LED+VDR, 115V,WITH CABLE PVC/PVC,CEI2022IIOR,3X0.75mm^2,GREY, L=5m			TIPO CG1		MATERIALE
High Tech Products HTP		H.T.P. HIGH TECH PRODUCTS	CODICE CG1N02VG2C035		