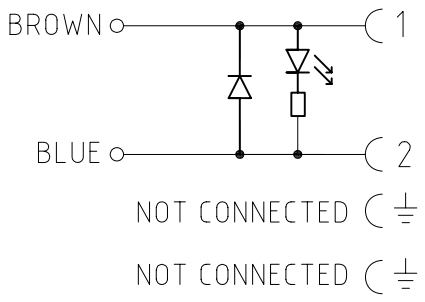

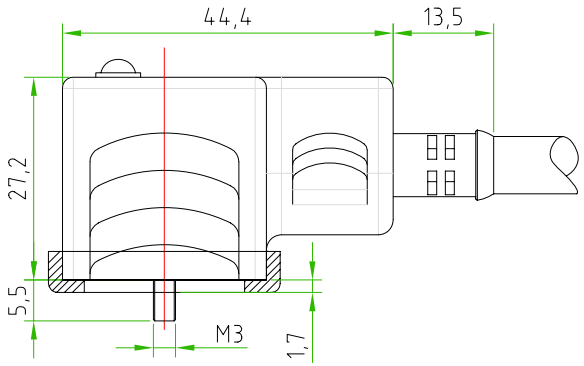

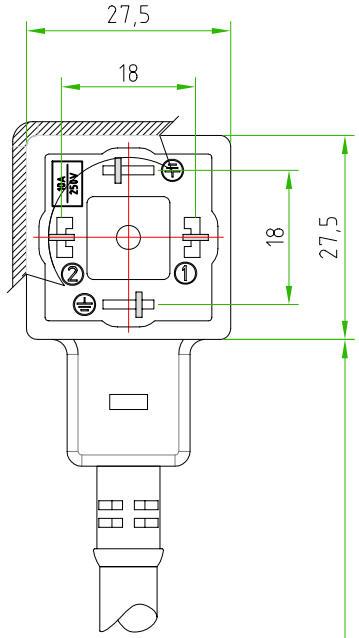

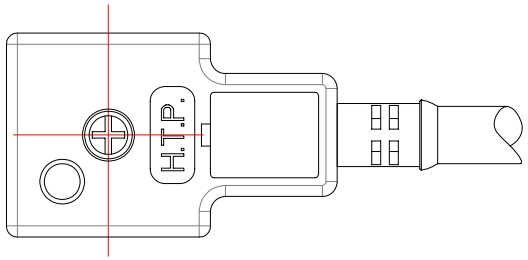

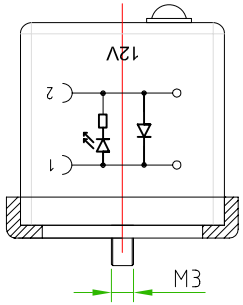

CONNECTOR FEATURES	PRODUCT TYPE	CG1 SERIES
	HOUSING COLOUR	BLACK
	CONTACT TYPE	2POLES+EARTH
	CONTACT SPACING	18mm
	CABLE LENGHT	1000mm
	PROTECTION CLASS	IP67
	STRIPPING	35mm STANDARD
	PEELING AND TINNING	5mm STANDARD
	FIXING SCREW	M3X28.7
	PROFILED GASKET	NBR
	EARTH H	6/12 NOT CONNECTED
	VOLTAGE	12V DC
	CONNECTOR WITH RED LED + DIODE(1A)	
CABLE FEATURES	H.T.P. CABLE CODE	13
	NUMBER OF CONDUCTORS	N°2
	CONDUCTOR SECTION	$1mm^2$
	CABLE MATERIAL	PVC H05VVF
	CABLE COLOUR	BLACK
	CONDUCTOR INSULATION MATERIAL	PVC

TOLLERANZE		DISEGNATORE LORENZO CIMMINO	DATA 18-11-10	SCALA 1 : 1	DISEGNO N.
U.d.M	ANGOLO	CONTROLLATO			
DESCRIZIONE DIN43650/A,2POLES+EARTH(H.6/12),WITH RED LED+DIODE, 12V,WITH CABLE PVC/PVC,H05VVF,2X$1mm^2$,BLACK,L=1m			TIPO CG1		MATERIALE
High Tech Products HTP	H.T.P. HIGH TECH PRODUCTS		CODICE CG1N02DL4C131		