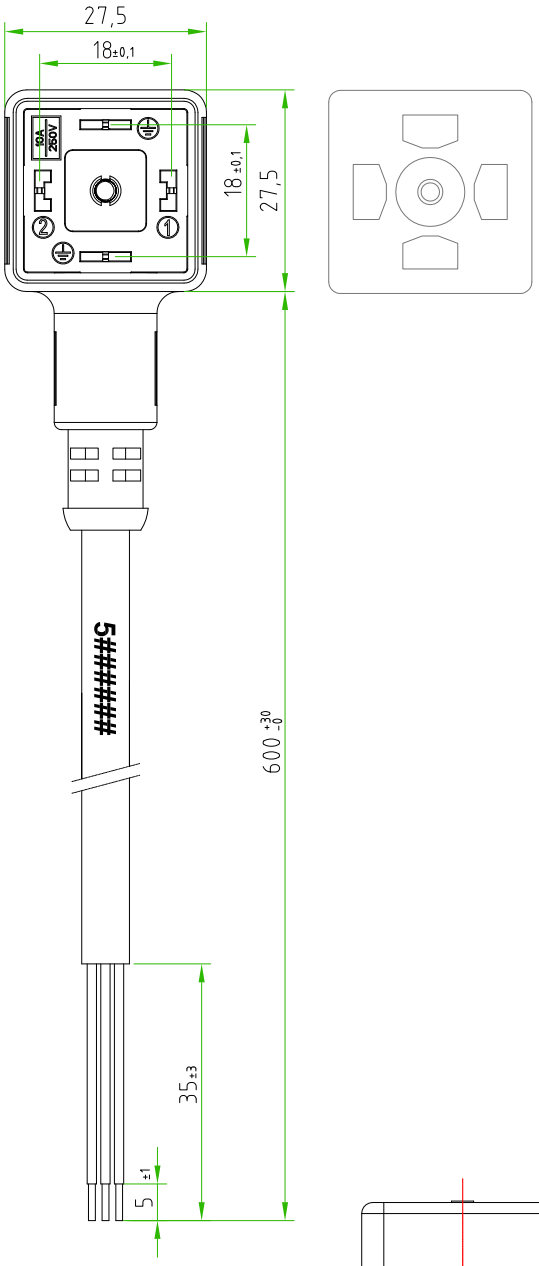

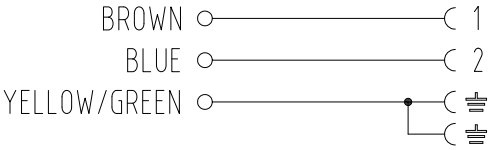

CONNECTOR FEATURES	PRODUCT TYPE	SQUARE CONNECTOR EN175301-803(type-A)
	CONNECTOR COLOUR	BLACK
	CONTACTS SPACING	18mm
	NUMBER OF CONTACTS	2POLES+2EARTHS
	EARTH POSITIONING	H.6-12
	CENTRAL FIXING SCREW	M3X0,5 L=25mm
	GASKET TYPE	INTEGRATED (NBR)
	PROTECTION CLASS	IP67
	CIRCUIT TYPE	WITHOUT ELECTRONIC
	RATED VOLTAGE	250V AC / 300V DC
	CONNECTOR WITH H.T.P.LOGO	
CABLE FEATURES	H.T.P.CABLE CODE	CAVO 03
	NUMBER OF CONDUCTORS	N°3
	CONDUCTORS SECTION	0,75mm²
	CABLE MATERIAL	PVC CEI2022IIOR
	COATING COLOUR	GREY RAL7032
	CONDUCTORS INSULATION MATERIAL	PVC
	CABLE LENGHT	600mm
	STRIPPING	35mm STANDARD
	PEELING AND TINNING	5mm STANDARD
	ON THE CABLE,NEAR THE CONNECTOR HEAD,MUST BE SILK PRINTED THE H.T.P. PRODUCTION DATE CODE 5######	

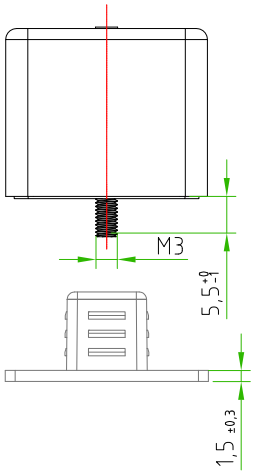

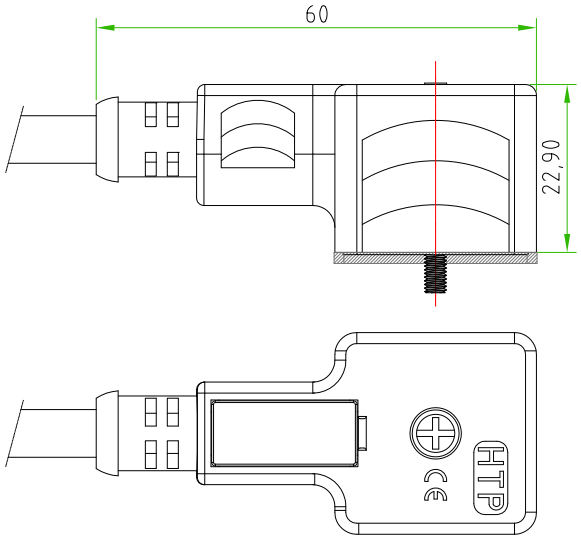

CUSTOMER APPROVAL	
SIGNATURE	DATE
PLEASE SIGN AND RETURN	

Rev.	Modify	Date	Signed	Approved

Rev.	Modify	Date	Signed	Approved

Rev.	Modify	Date	Signed	Approved

A4

Designer	SUGLIANI R.	Date	2016-03-22	Tollerance	±0.3	Units:	mm	Series	EN175301-803	Drawing n.
Approved	CIMMINO L.	Date	2016-03-22	Scale	1:1	Size:	A4	Customer code:		1-1

HTP High Tech Products S.R.L.

DESCRIPTION

SQUARE CONNECTOR EN175301-803(type-A),2P.+P.E.,BLACK,WITHOUT ELECTRONIC, 250V AC / 300V DC,WITH CABLE PVC/PVC,CEI2022IIOR,3G0.5mm², GREY COLOUR,L=0,6m CONNECTOR WITH H.T.P.LOGO

H.T.P.PART NUMBER

CG1N02000C030F

H.T.P. High Tech Products S.R.L. Via Lesina,45 -24030- Brembate di Sopra (Bg) - ITALY Phone:+39.035692509 Fax:+39.035203291 E-mail: info@webhtp.eu Web: http://www.webhtp.eu/

ALL RIGHTS ARE RESERVED.