Frontal view

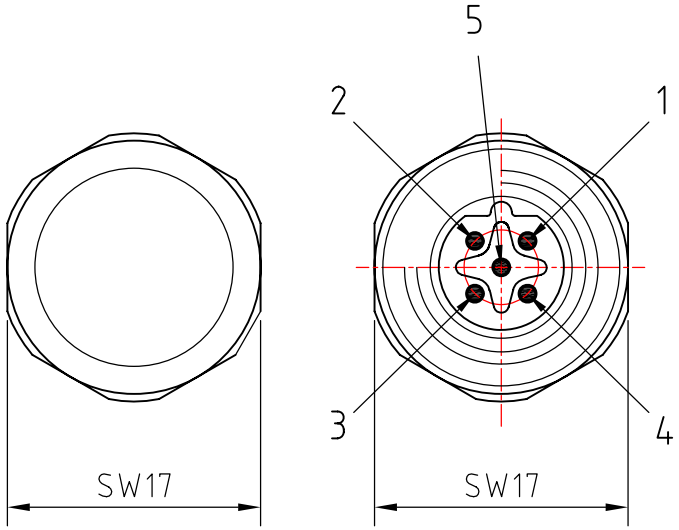

Lateral view

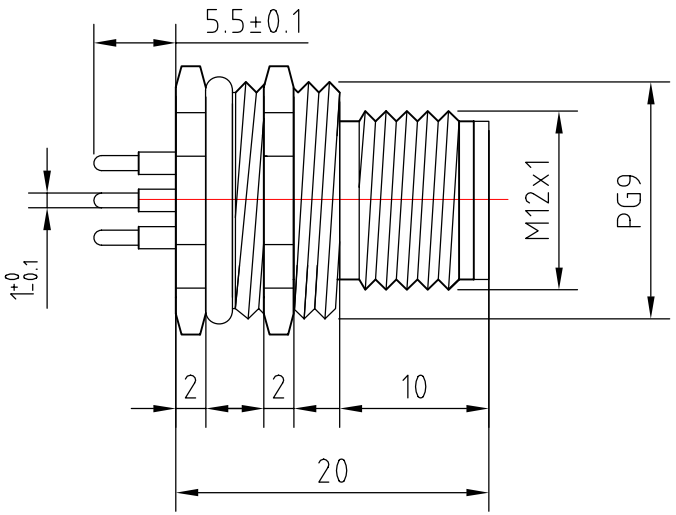

Back view

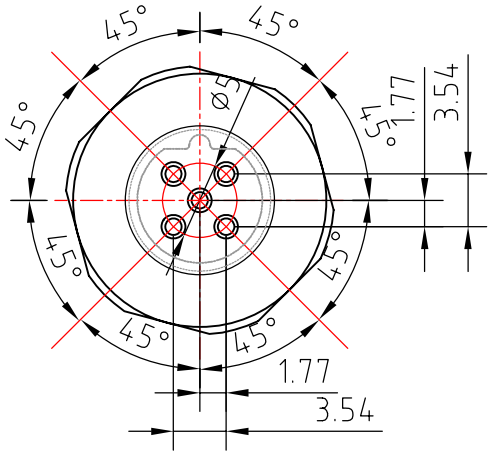

CONNECTOR FEATURES	CONNECTOR TYPE	M12 TO PANEL B-CODED
	MOUNTING TYPE	BACK
	CONTACT TYPE	MALE
	NUMBER OF CONTACTS CONNECTED	n°5
	HOUSING MATERIAL	METAL (CuZn/Ni)
	THREAD	PG9
	SWITCH FIXED NUT	SW17
	CONTACT TYPE	SOLDERED FOR PCB
	CONTACT LENGHT	5,5mm ±0.1

TOLLERANZE ±0.2		DISEGNATORE LORENZO CIMMINO	DATA 12.11.09	SCALA 2:1		DISEGNO N.
U.d.M	ANGOLO	CONTROLLATO				
DESCRIZIONE M12 B-CODED MALE PANEL 5 POLES BACK MOUNTING PG9 FOR PCB			TIPO M12			MATERIALE
HTP High Tech Products	H.T.P. HIGH TECH PRODUCTS		CODICE B-12MS5000-PG9			