Rev.	Modify	Date	Signed	Approved

Rev.	Modify	Date	Signed	Approved

Rev.	Modify	Date	Signed	Approved

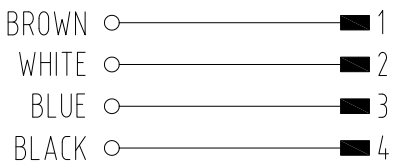

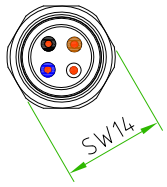

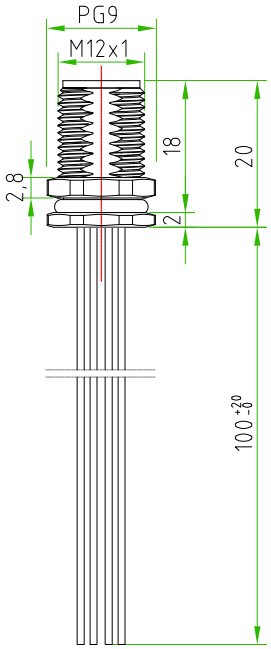

CONNECTOR FEATURES	PRODUCT TYPE	M12 CIRCULAR CONNECTOR TO PANEL WITH WIRES
	TYPE MOUNTING	BACK MOUNTING
	CONTACTS TYPE	MALE 4POLES
	NUMBER OF CONTACTS CONNECTED	N°4
	HOUSING MATERIAL	STAINLESS STEEL AISI316L
	O-RING MATERIAL	NBR
	FIXING THREAD	M12x1
	SIZE CUT	11mm (+0,1/-0)
	SIZE FIXED NUT(SW)	SW14
	SIZE MOBILE NUT(SW)	SW14
	PROTECTION CLASS	IP67
	RATED VOLTAGE	250V AC/DC
	RATED CURRENT	4A
	CONNECTOR WITHOUT ANY LOGO	
WIRES FEATURES	NUMBER OF CONDUCTORS	N°4
	CONDUCTORS SECTION	0,25mm²
	CONDUCTORS INSULATION MATERIAL	PVC
	CONDUCTORS LENGHT	100mm

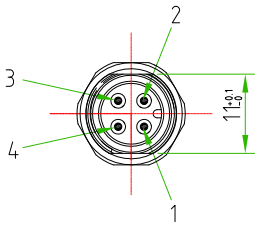

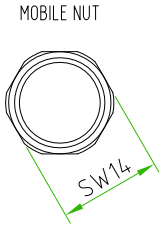

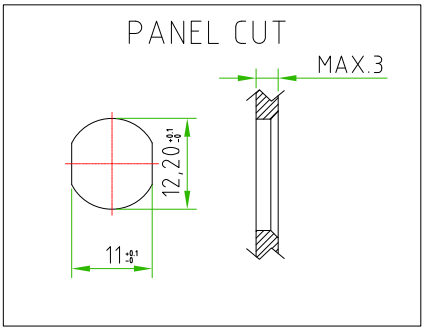

PAY ATTENTION to the position of the polarization key towards the CUT and the exagonal fixed nut.
The polarization key must be 180° in reference to the CUT of the thread

CUSTOMER APPROVAL	
SIGNATURE	DATE
PLEASE SIGN AND RETURN	

A4

Designer	SUGLIANI R.	Date	2020-11-12	Tollerance	±0.3	Units:	mm	Series	M12	Drawing n.	1-1
Approved	CIMMINO L.	Date	2020-11-12	Scale	1:1	Size:	A4	Customer code:			

HTP™ High Tech Products S.R.L.

DESCRIPTION

CIRCULAR CONNECTOR M12,MALE,TO PANEL,4POLES,BACK MOUNTING,M12x1 THREAD, COMPLETE WITH CUT(POLARIZATION KEY OF THE CONNECTOR MUST BE POSITIONED 180° TOWARDS THE CUT),WITH N°4 WIRES PVC 0,25mm² L=100mm.
CONNECTOR WITHOUT ANY LOGO

H.T.P.PART NUMBER

12MR4A0A-M12X1-IN-LS

H.T.P. High Tech Products S.R.L. Via Lesina,45 -24030- Brembate di Sopra (Bg) - ITALY Phone:+39.035692509 Fax:+39.035203291 E-mail: info@webhtp.eu Web: http://www.webhtp.eu/

ALL RIGHTS ARE RESERVED.