Frontal view

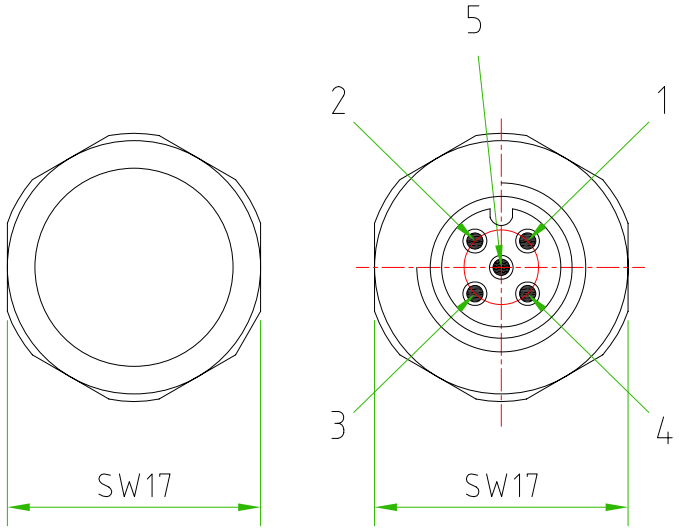

Lateral view

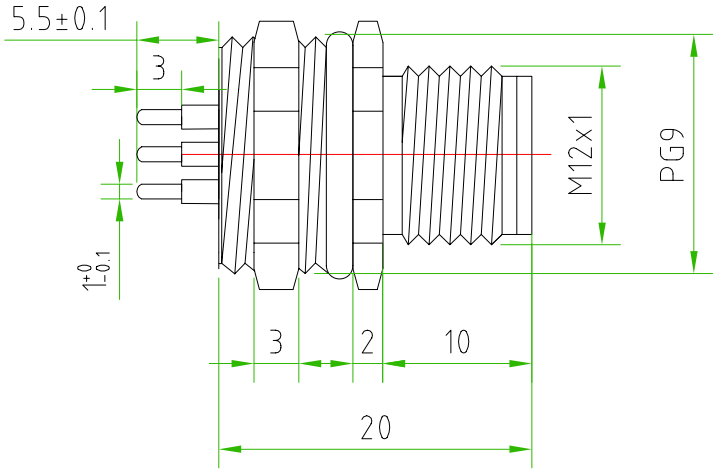

Back view

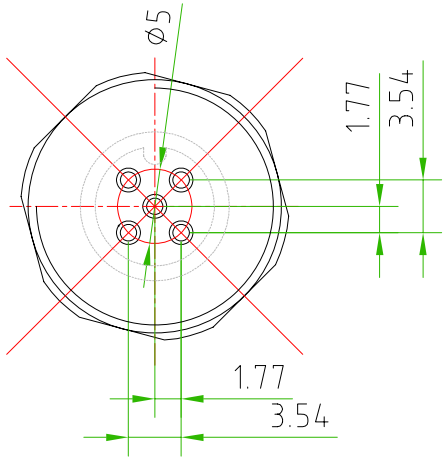

PANEL SIZE

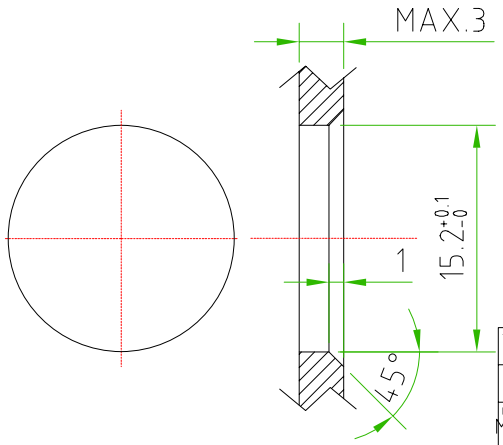

CONNECTOR FEATURES	CONNECTOR TYPE	M12 TO PANEL
	MOUNTING TYPE	FRONTAL
	CONTACT TYPE	MALE
	NUMBER OF CONTACTS CONNECTED	n°5
	HOUSING MATERIAL	Brass+nickel plated (CuZnNi)
	FIXING THREAD	PG9
	SWITCH FIXED NUT	SW17
	CONTACT TYPE	SOLDERED FOR PCB
	CONTACT LENGHT	5.5mm ±0.1
	RATED VOLTAGE	60V
	RATED CURRENT	4A

TOLLERANZE ±0.2	DISEGNATORE LORENZO CIMMINO	DATA 25.01.13	SCALA 2:1		DISEGNO N.
U.d.M / ANGOLO	CONTROLLATO				
DESCRIZIONE M12 MALE PANEL 5 POLES FRONTAL MOUNTING, PG9 THREAD,CONTACTS FOR PCB		TIPO M12			MATERIALE
High Tech Products HTP	H.T.P. HIGH TECH PRODUCTS	CODICE 12MQ5000-PG9			