Rev.	Modify	Date	Signed	Approved

Rev.	Modify	Date	Signed	Approved

Rev.	Modify	Date	Signed	Approved

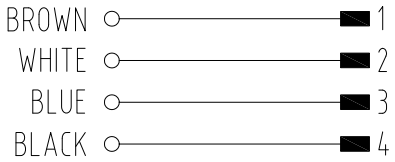

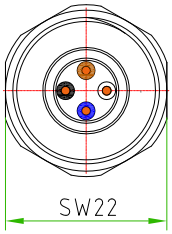

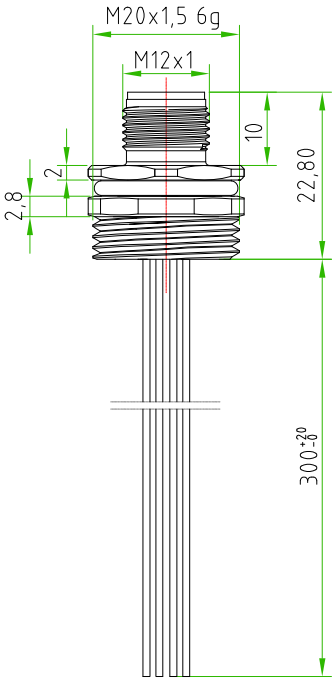

CONNECTOR FEATURES	PRODUCT TYPE	M12 CIRCULAR CONNECTOR TO PANEL WITH WIRES
	TYPE MOUNTING	FRONTAL MOUNTING
	CONTACTS TYPE	MALE 4POLES
	NUMBER OF CONTACTS CONNECTED	N°4
	HOUSING MATERIAL	BRASS+NICKEL PLATED
	O-RING MATERIAL	NBR
	FIXING THREAD	M20X1,5
	SIZE FIXED NUT(SW)	SW22
	SIZE MOBILE NUT(SW)	SW22
	PROTECTION CLASS	IP67
	RATED VOLTAGE	250V AC/DC
	RATED CURRENT	4A
	CONNECTOR WITHOUT ANY LOGO	
WIRES FEATURES	NUMBER OF CONDUCTORS	N°4
	CONDUCTORS SECTION	0,34mm^2
	CONDUCTORS INSULATION MATERIAL	PVC
	CONDUCTORS LENGHT	300mm

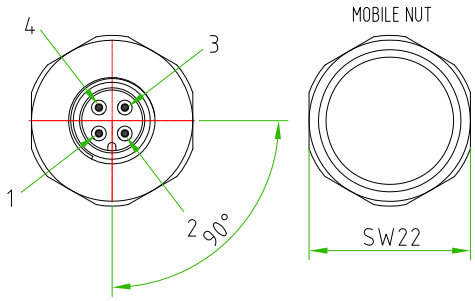

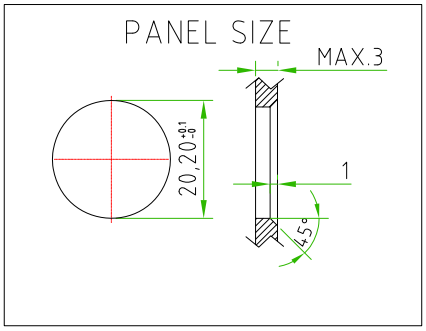

PAY ATTENTION to the position of the polarization key towards the exagonal fixing nut.

CUSTOMER APPROVAL	
SIGNATURE	DATE
PLEASE SIGN AND RETURN	

A4

Designer	CIMMINO L.	Date	2016-01-15	Tollerance	±0.3	Units:	mm	Series	M12	Drawing n.	1-1
Approved	MAZZOLA M.	Date	2016-01-15	Scale	1:1	Size:	A4	Customer code:			

HTP High Tech Products S.R.L.

DESCRIPTION

CIRCULAR CONNECTOR M12,MALE,TO PANEL,4POLES,FRONTAL MOUNTING,M20X1,5 FIXING THREAD,WITH N°4 WIRES PVC 0,34mm^2 L=300mm
CONNECTOR WITHOUT ANY LOGO

H.T.P.PART NUMBER

12MP4B0C-M20

H.T.P. High Tech Products S.R.L. Via Lesina,45 -24030- Brembate di Sopra (Bg) - ITALY Phone:+39.035692509 Fax:+39.035203291 E-mail: info@webhtp.eu Web: http://www.webhtp.eu/

ALL RIGHTS ARE RESERVED.