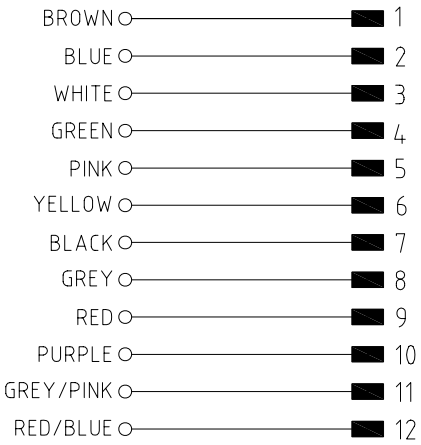

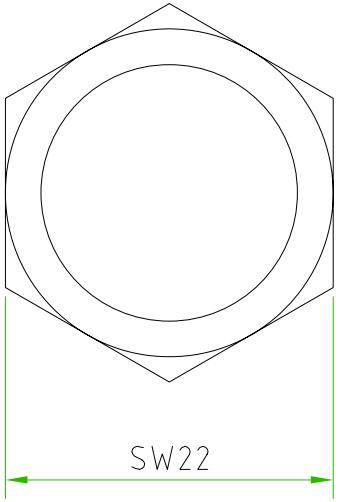

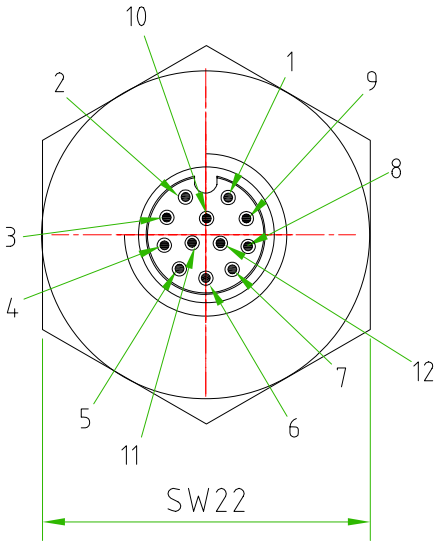

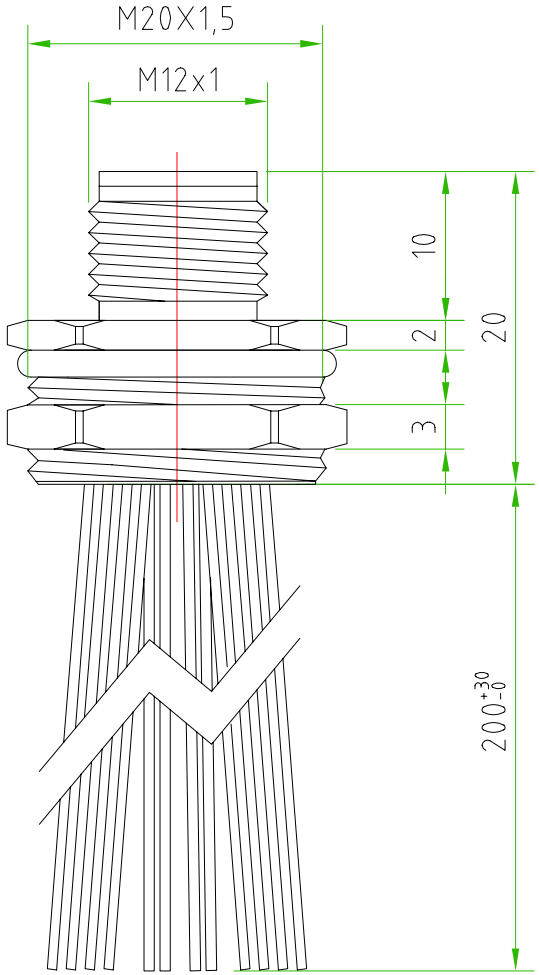

PANEL SIZE

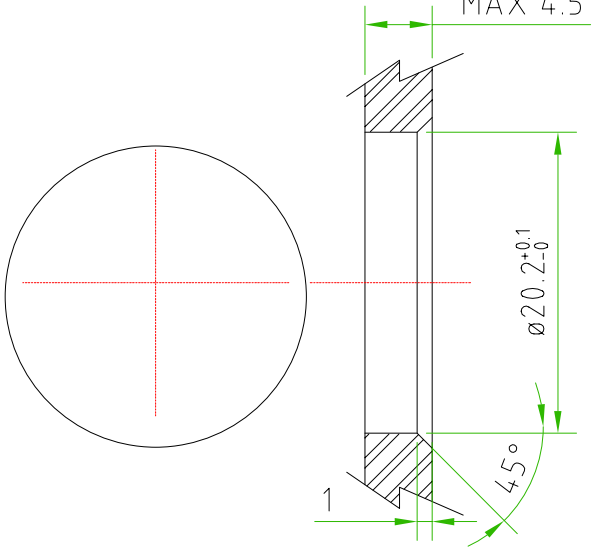

CONNECTOR FEATURES	CONNECTOR TYPE	M12 TO PANEL
	MOUNTING TYPE	FRONTAL
	CONTACT TYPE	MALE
	NUMBER OF CONTACTS CONNECTED	n°12
	HOUSING MATERIAL	Brass+nickel plated (CuZnNi)
	FIXING THREAD	M20X1,5
	SWITCH FIXED NUT	SW22
	CONDUCTOR MATERIAL	PVC
	CONDUCTOR LENGHT	200mm
	CONDUCTOR SECTION	0.14mm^2
	n°OF CONDUCTORS	n°12
	RATED VOLTAGE	30V AC/DC
	RATED CURRENT	1,5A
	CONNECTOR WITHOUT H.T.P.LOGO	

TOLLERANZE ±0.2	DISEGNATORE LORENZO CIMMINO	DATA 03.04.13	SCALA 2:1		DISEGNO N.
U.d.M / ANGOLO	CONTROLLATO				
DESCRIZIONE M12 MALE PANEL 12 POLES FRONTAL MOUNTING M20X1,5 WITH N.12 WIRES 0.14mm^2 L=200mm. CONNECTOR WITHOUT H.T.P.LOGO		TIPO M12			MATERIALE
High Tech Products HTP	H.T.P. HIGH TECH PRODUCTS	CODICE 12MP12K0B-M20			