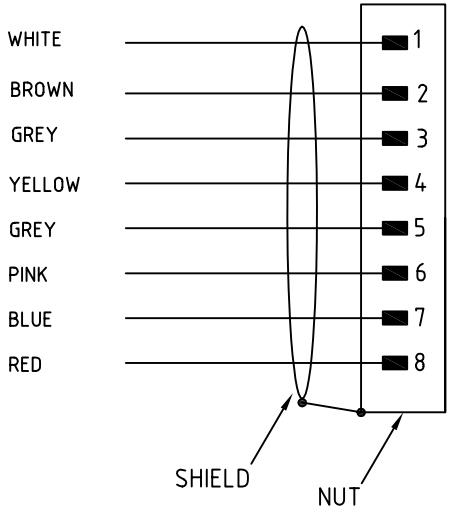

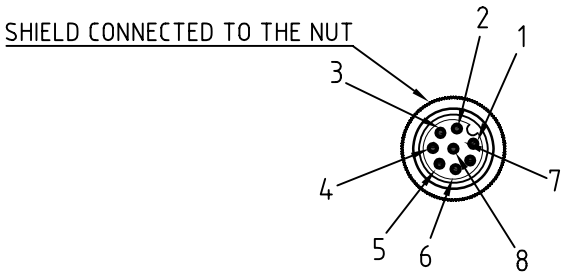

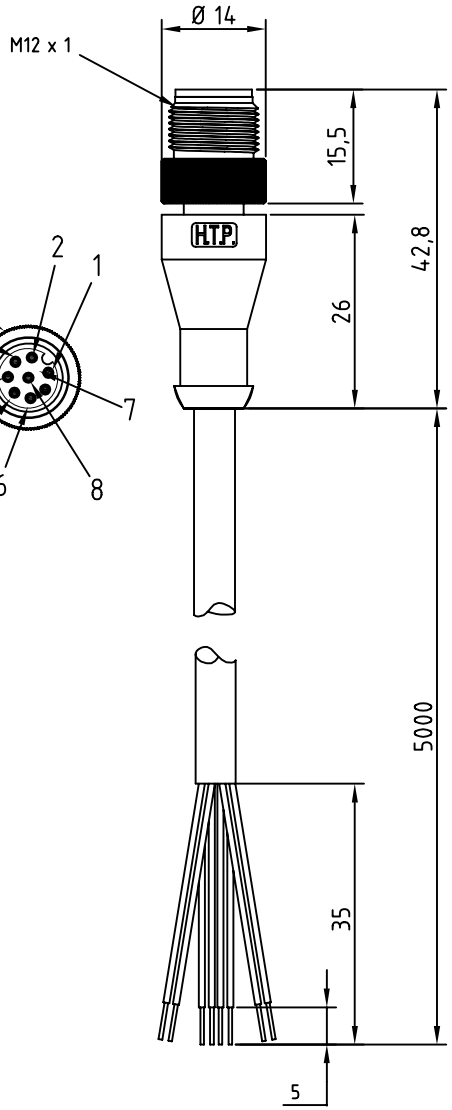

CONNECTOR FEATURES	CONNECTOR TYPE	M12
	CONTACT TYPE	MALE 8POLES
	CABLE LENGHT	5000mm
	PROTECTION CLASS	IP69K
	STRIPPING	35mm STANDARD
	PEELING	5mm STANDARD
	NUMBER OF CONTACTS CONNECTED	N°8
	CONNECTOR WITH H.T.P.LOGO	
	TOTALLY SHIELDED CONNECTOR(SHIELD CONNECTED TO THE NUT)	
CABLE FEATURES	H.T.P.CABLE CODE	J
	NUMBER OF CONDUCTORS	N°8
	CONDUCTOR SECTION	0.25mm²
	CABLE MATERIAL	PVC CEI2022
	COATING COLOUR	BLACK
	CONDUCTOR INSULATION MATERIAL	PVC
	CABLE SHIELDED	

TOLLERANZE		DISEGNATORE LORENZO CIMMINO	DATA 09.02.10	SCALA 1:1	DISEGNO N.
U.d.M	ANGOLO	CONTROLLATO			
DESCRIZIONE M12 MALE 180° 8 POLES,TOTALLY SHIELDED,WITH CABLE PVC/PVC,CEI2022,BLACK,SHIELDED, 8X0.25mm²,L=5m			TIPO M12		MATERIALE
High Tech Products HTP H.T.P. HIGH TECH PRODUCTS			CODICE 12MJ8J5Z		