BROWN — 1
WHITE — 2
BLUE — 3
BLACK — 4
GREY — 5

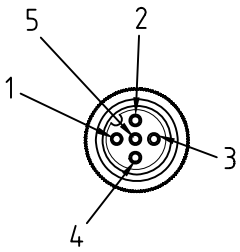

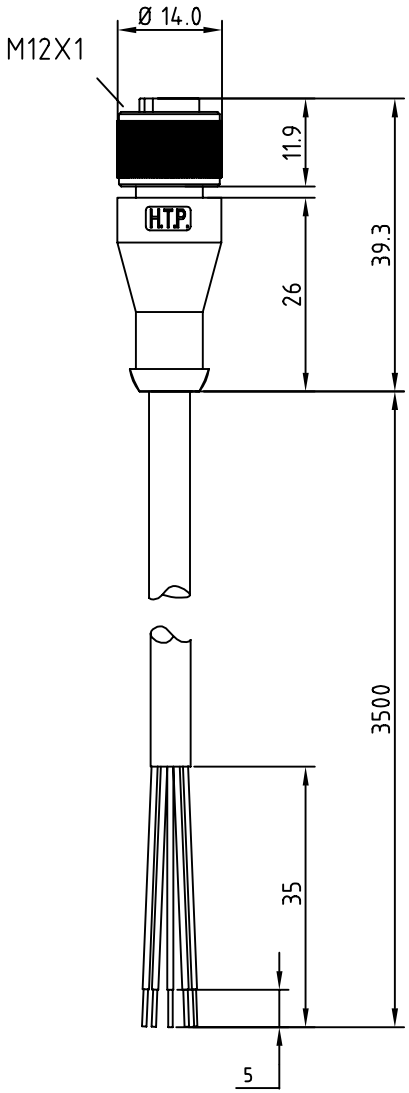

CONNECTOR FEATURES	TYPE CONTACT	FEMALE 5POLES
	CABLE LENGHT	3500mm
	PROTECTION CLASS	IP69K
	STRIPPING	35mm STANDARD
	PEELING	5mm STANDARD
	NUMBER OF CONTACTS CONNECTED	N°5
CABLE FEATURES	H.T.P.CABLE CODE	A
	NUMBER OF CONDUCTORS	n°5
	CONDUCTOR SECTION	0.25mm²
	CABLE MATERIAL	PVC CEI2022
	COATING COLOUR	BLACK
	CONDUCTOR INSULATION MATERIAL	PVC

TOLLERANZE		DISEGNATORE LORENZO CIMMINO	DATA 25.03.09	SCALA 1:1	DISEGNO N.
U.d.M	ANGOLO	CONTROLLATO			
DESCRIZIONE M12 CONNECTOR FEMALE 180°,5POLES,WITH CABLE PVC/PVC, 5X0,25mm²,CEI2022,BLACK,LENGHT 3.5m			TIPO M12		MATERIALE
High Tech Products HTP	H.T.P. HIGH TECH PRODUCTS		CODICE 12FD5A3E		