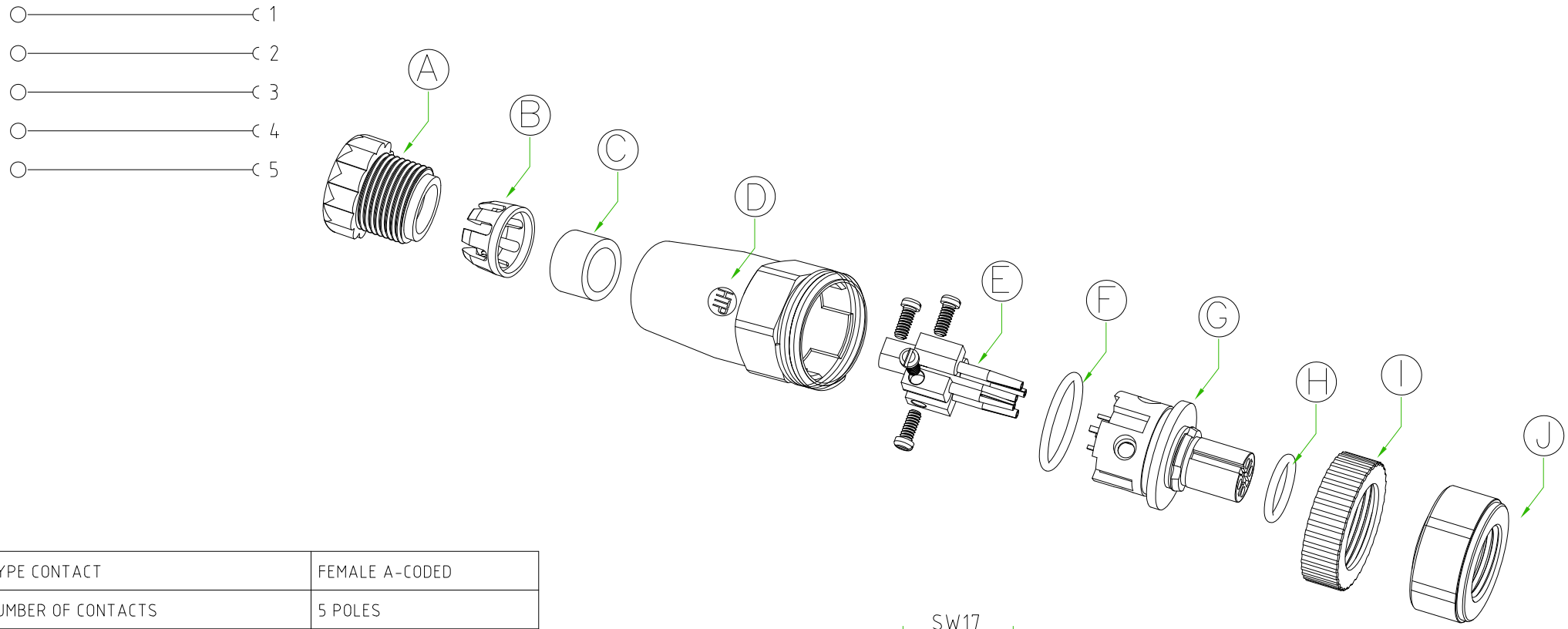

CONNECTOR FEATURES	
TYPE CONTACT	FEMALE A-CODED
NUMBER OF CONTACTS	5 POLES
HOUSING MATERIAL	PA66
HOUSING TYPE	180°
HOUSING COLOUR	BLACK
PRESS CABLE SCREW	PG7
SUITABLE CABLE	FROM ø4mm TO ø6mm
WIRE GAUGE (max)	0,75mm²
RATED VOLTAGE	60V AC/DC
RATED CURRENT	4A
COUPLING NUT MATERIAL	STAINLESS STEEL AISI304
O-RING MATERIAL	NBR
PROTECTION CLASS	IP67
TEMPERATURE RANGE	-25°C TO +90°C
CONNECTOR WITH H.T.P.LOGO	

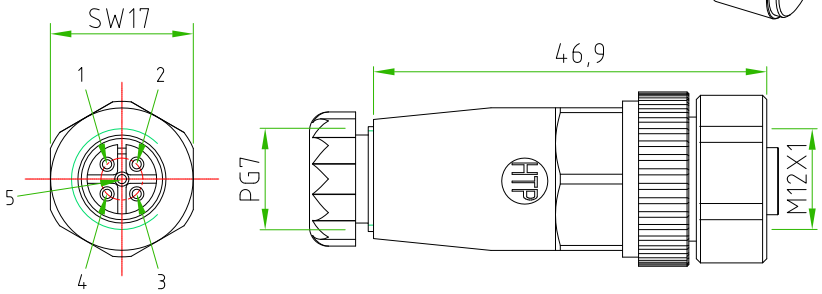

A	PRESS CABLE SREW
B	LAMELLAE PRESS-CABLE SEAL
C	GAKET PRESS-CABLE SEAL
D	HOUSING BLACK
E	SCREW CONTACT GOLD PLATED
F	O-RING
G	INTERNAL CORE M12
H	O-RING
I	PLASTIC NUT FOR HOUSING
J	M12 NUT STAINLESS STEEL AISI304

TOLLERANZE ±0.2		DISEGNATORE LORENZO CIMMINO	DATA 27.01.17	SCALA 1:1		PESO
U.d.M	ANGOLO	CONTROLLATO				
DESCRIZIONE M12 FEMALE A-CODED ANGLED 90°,5POLES, FIELD ATTACHABLE,PG7.STAINLESS STEEL AISI304 CONNECTOR WITH H.T.P.LOGO			TIPO M12			MATERIALE
High Tech Products HTP		H.T.P. HIGH TECH PRODUCTS	CODICE 12FC5000-INOX			