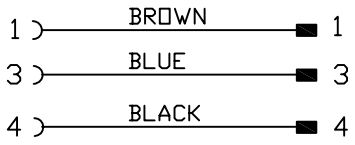

CONNECTOR FEATURES	TYPE CONCTACT	FEMALE 3 POLES;MALE 3POLES
	CABLE LENGHT	3.000mm
	PROTECTION CLASS	IP67
	STRIPPING	NO
	PEELING	NO
	NUMBER OF CONTACTS CONNECTED	n°3
CABLE FEATURES	H.T.P. CABLE CODE	A
	NUMBER OF CONDUCTORS	n°3
	CONDUCTOR SECTION	0.25mm
	CABLE MATERIAL	PVC
	COATING COLOUR	BLACK
	CONDUCTOR INSULATION MATERIAL	PVC

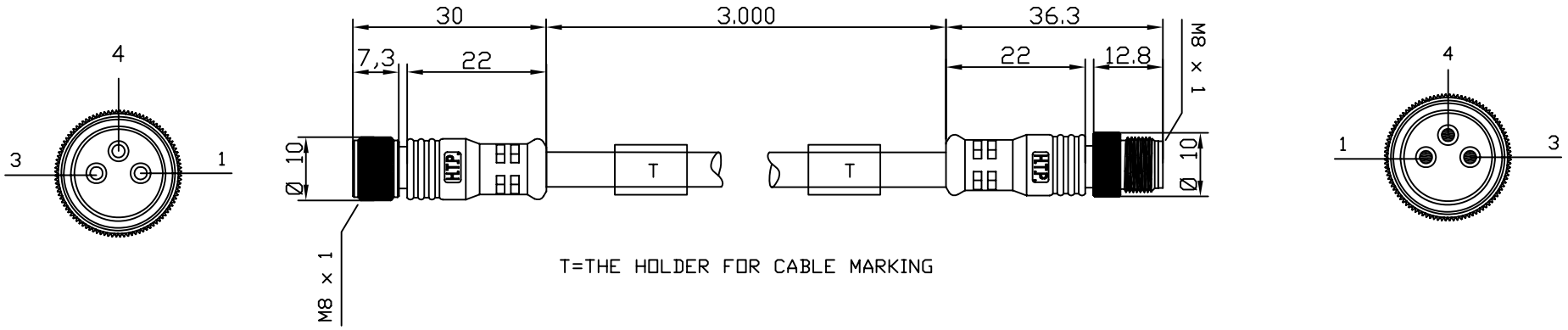

T=THE HOLDER FOR CABLE MARKING

TOLLERANZE		DISEGNATORE LORENZO CIMMINO	DATA 10-07-08	SCALA 1:1	DISEGNO N.
U.d.M	ANGOLO	CONTROLLATO			
DESCRIZIONE EXTENSION M8 FEMALE 180° 3 POLES + M8 180° MALE 3POLES WITH CABLE PVC/PVC,3X0.25mm,BLACK,LENGHT 3m			TIPO M8		MATERIALE
High Tech Products HTP H.T.P. HIGH TECH PRODUCTS			CODICE 08FD3A3Z08MD		